LUTHERAN WORLD FEDERATION

Dadaab Area Program

"TENDER FOR INSTALLATION OF CONCRETE SLABS FOR 5,000 LITRES CAPACITY WATER STORAGE TANKS"

TENDER NO.:

LWF/DDB/CBP/28263/2022

LOCATION:

Dadaab: Darusalaam, Haji Adam, Taransi, Lan Dig and Lixiley

Fafi: Alinjugur, Walwasi, Ruja, Borehole, and Sedah Goe

SUBMISSION DEADLINE.:

1700HRS

4th May 2022

A. INVITATION TO TENDER

Lutheran World Federation (LWF) invites tenders from approved and reputable building works Contractors for the above works at Dadaab Host community villages in Dadaab (Darusalaam, Haji Adam, Taransi, Lan Dig and Lixiley) and Fafi (Alinjugur, Walwasi, Ruja, Borehole, and Sedah Goe)

B. INSTRUCTIONS TO TENDERERS.

1. General

1.1 The successful Tenderer will be expected to complete the Works by **30th of June 2022**

1.2 Tenderers shall include the following information and documents with their Tenders, unless otherwise stated:

(a) Copies of certificates of registration, and principal place of business
(b) Total monetary value of similar construction work performed for each of the last 2 years
(c) Experience in works of a similar nature and size for each of the last 2 years, and clients who may be contacted for further information on these contracts
(d) Major items of construction equipment owned
(e) Qualifications and experience of key site management and technical personnel proposed for the Contract;
(f) Bank statement or financial report for the past 6 months

1.3 The Tenderer shall bear all costs associated with the preparation and submission of his/her tender, and LWF will in no case be responsible or liable for those costs.

1.4 The Tenderer, at the Tenderer's own responsibility and risk, is encouraged to visit and examine the site of the works and its surroundings, and obtain all information that may be necessary for preparing the tender and entering into a contract for construction of the Works. The costs of visiting the Site shall be at the Tenderer's own expense.

1.5 The procurement entity's employees, committee members, board members and their relative (spouse and children) are not eligible to participate in the tender.

1.6 The procuring entity shall allow the tenderer to review the tender document free of charge before purchase.

2. Tender Documents

2.1 The complete set of tender documents comprises the documents listed here below and any addenda issued in accordance with clause 2.4 here below: -

(a) These instructions to Tenderers
(b) Form of Tender
(c) Specifications
(d) Drawings
(e) Bills of Quantities/Schedule of Rates (whichever is applicable)

(f) Other materials required to be filled and submitted in accordance with these Instructions and Conditions

2.2 The Tenderer shall examine all instructions, forms and specifications in the tender documents. Failure to furnish all information required by the tender documents may result in rejection of his/her tender.

2.3 Prospective Tenderers making inquiries of the tendering documents may notify LWF in writing via email at least a week before the closure of the tender. The LWF will respond will respond to any request for clarification received earlier than five [5] days prior to the deadline for submission of tenders. Copies of LWF's response will be forwarded to all persons issued with tendering documents, including a description of the inquiry, but without identifying its source.

2.4 Before the deadline for submission of tenders, LWF may modify the tendering documents by issuing addenda. Any addendum thus issued shall be part of the tendering documents and shall be communicated in writing or by cable, telex or facsimile to all Tenderers. Prospective Tenderers shall acknowledge receipt of each addendum in writing to LWF.

2.5 To give prospective Tenderers reasonable time in which to take an addendum into account in preparing their tenders, LWF shall extend, as necessary, the deadline for submission of tenders in accordance with clause 4.5 here below.

3. Preparation of Tenders

3.1 All documents relating to the tender and any correspondence shall be in English language.

3.2 The tender submitted by the Tenderer shall comprise the following: -

(a) The Tender;

(b) Priced Bill of Quantities/Schedule of Rates for lump-sum Contracts

(c) Any other materials required to be completed and submitted by Tenderers.

3.3 The Tenderer shall fill in rates and prices for all items of the Works described in the Bill of Quantities/Schedule of Rates. Items for which no rate or price is entered by the Tenderer will not be paid for when executed and shall be deemed covered by the other rates and prices in the Bill of Quantities/Schedule of Rates.

3.4 The rates and prices quoted by the Tenderer shall not be subject to any adjustment during the performance of the Contract.

3.5 The unit rates and prices shall be in Kenya Shillings.

3.6 Tenders shall remain valid for a period of 60 days from the date of submission. However, in exceptional circumstances, LWF may request that the Tenderers extend the period of validity for a specified additional period. The request and the Tenderers' responses shall be made in writing.

3.7 The Tenderer shall prepare one original of the documents comprising the tender documents as described in these Instructions to Tenderers.

3.8 The original shall be typed or written in indelible ink and shall be signed by a person or persons duly authorized to sign on behalf of the Tenderer. The person or persons signing the tender shall initial all pages of the tender where alterations or additions have been made.

3.9 Clarification of tenders shall be requested by the tenderer to be received by the procuring entity not later than 5 days prior to the deadline for submission of tenders.

3.10 The procuring entity shall reply to any clarifications sought by the tenderer within 3 days of receiving the request to enable the tenderer to make timely submission of its tender.

4. Submission of Tenders

4.1 The tender shall be duly filled and submitted in PDF to email address; procurement.dadaab@lutheranworld.org

4.2 Tenders shall be delivered to LWF email address specified above not later than the time and date specified in the invitation to tender.

4.3 The tenderer shall not submit any alternative offers unless they are specifically required in the tender documents. Only one tender may be submitted by each tenderer. Any tenderer who fails to comply with this requirement will be disqualified.

4.4 Any tender received after the deadline for opening tenders will be returned to the tenderer un- opened.

4.5 LWF may extend the deadline for submission of tenders by issuing an amendment in accordance with sub-clause 2.5 in which case all rights and obligations of The Authority and the Tenderers previously subject to the original deadline will then be subject to the new deadline.

5. Tender Opening and Evaluation

5.1 The tenders will be opened immediately after the closure of the bid by the tender opening committee. Tenderers are not expected to attend the opening and evaluation.

5.2 The Tenderers' names, the total amount of each tender and such other details as may be considered appropriate, will be announced at the opening by The Authority. Minutes of the tender opening, including the information disclosed to those present will also be prepared by LWF's procurement officer.

5.3 Information relating to the examination, clarification, evaluation and comparison of tenders and recommendations for the award of the Contract shall not be disclosed to Tenderers or any other persons not officially concerned with such process until the award to the successful Tenderer has been announced. Any effort by a Tenderer to influence LWF's officials, processing of tenders or award decisions may result in the rejection of his tender.

5.4 Tenders determined to be substantially responsive will be checked for any arithmetic errors. Errors will be corrected as follows:

(a) where there is a discrepancy between the amount in figures and the amount in words, the amount in words will prevail; and

(b) where there is a discrepancy between the unit rate and the line item total resulting from multiplying the unit rate by the quantity, the unit rate as quoted will prevail, unless in the opinion of LWF's representative, there is an obvious typographical error, in which case the adjustment will be made to the entry containing that error.

(c) In the event of a discrepancy between the tender amount as stated in the Form of Tender and the corrected tender figure in the main summary of the Bill of Quantities/Quotation, the amount as stated in the Form of Tender shall prevail. The Error Correction Factor shall be computed by expressing the difference between the tender amount and the corrected tender sum as a percentage of the Corrected Builder's Work (i.e. corrected tender sum less P.C. and Provisional Sums).

(e) The Error Correction Factor shall be applied to all Builders' Work (as a rebate or addition as the case may be) for the purposes of valuations for Interim Certificates

and valuation of variations.

(f) The amount stated in the tender will be adjusted in accordance with the above procedure for the correction of errors and with concurrence of the Tenderer, shall be considered as binding upon the Tenderer. If the Tenderer does not accept the corrected amount, the tender may be rejected and the Tender Security forfeited.

5.5 The tender evaluation committee shall evaluate the tender within **14 days** of the validity period from the date of opening the tender.

5.7 Where contract price variation is allowed, the valuation shall not exceed 15% of the original contract price.

5.8 Price variation requests shall be processed by the procuring entity within 30 days of receiving the request.

5.9 Preference where allowed in the evaluation of tenders shall not exceed 15%

5.10 To assist in the examination, evaluation, and comparison of tenders, LWF at its discretion, may request [in writing] any Tenderer for clarification of the tender, including breakdowns of unit rates. The request for clarification and the response shall be via email but no change in the tender price or substance of the tender shall be sought, offered or permitted.

5.11 The Tenderer shall not influence LWF on any matter relating to the tender from the time of the tender opening to the time the Contract is awarded. Any effort by the Tenderer to influence LWF or his employees in his decision on tender evaluation, tender comparison or Contract award may result in the rejection of the tender.

6. Award of Contract

6.1 The award of the Contract will be made to the Tenderer who has offered the *best* evaluated tender price.

6.2 Notwithstanding the provisions of clause 6.1 above, LWF reserves the right to accept or reject any tender and to cancel the tendering process and reject all tenders at any time prior to the award of Contract without thereby incurring any liability to the affected Tenderer or Tenderers or any obligation to inform the affected Tenderer or Tenderers of the grounds for the action.

6.3 The Tenderer whose tender has been accepted will be contacted via phone and email and enter into written contract.

6.4 The Contract Agreement will incorporate all agreements between LWF and the successful Tenderer. It will be signed by LWF and sent to the successful Tenderer, within 10 days following the notification of award. Within 5 days of receipt, the successful Tenderer will sign the Agreement and return it to The Authority.

6.5 The procuring entity may at any time terminate procurement proceedings before contract award and shall not be liable to any person for the termination.

6.6 The procuring entity shall give prompt notice of the termination to the tenderers and on request give its reasons for termination within 7 days of receiving the request from any tenderer.

7 Corrupt and fraudulent practices

7.1 The procuring entity requires that the tenderer observes the highest standard of ethics during the procurement process and execution of the contract. A tenderer shall sign a declaration that he has not and will not be involved in corrupt and fraudulent practices.

7.2 The procuring entity will reject a tender if it determines that the tenderer recommended for award has engaged in corrupt and fraudulent practices in competing for the contract in question.

7.3 Further a tenderer who is found to have indulged in corrupt and fraudulent practices risks being debarred from participating in public procurement in Kenya.

C. EVALUATION

i) Evaluation Criteria

The tender document submitted will be evaluated in three (3) stages; - General Mandatory, Technical Capacity and Financial. The evaluation process will be in stages as follows: -

1. General Mandatory –Pass/Fail
2. Technical Capacity Evaluation– Pass mark of 70%
3. Financial – Lowest Cost Evaluated bidder
4.

ii) Mandatory Evaluation

The bids shall undergo a general pre-qualification process in order to determine bid compliance to the following mandatory requirements. Tenderers are required to comply to the following requirements, failure to which the firm shall not proceed with the next stage of evaluation: -

NO.	REQUIREMENTS	Pass	Fail
M1	a) Certificate of Registration/Incorporation		
M2	b) Valid Tax Compliance Certificate		
M3	c) Copy of CR12 Certificate showing names and citizenship of directors and shareholding		
M4	Dully filled, signed and stamped business questionnaire		
M5	Dully filled, signed and stamped Form of Tender		

Failure to submit any of the above-mentioned documentation, will lead to disqualification of the firm at the mandatory stage. The bidders that will meet all the mandatory requirements above will qualify to proceed to technical evaluation stage.

iii) Technical Evaluation

Evaluation Criteria	Requirements	Proof	Maximum Score
Experience of the Firm	Bidders should have executed at least (2) contracts/orders of similar nature in the category selected (Installations and refurbishment of to steel works)	Bidders must submit work copies of order/contact/LPOs (5mks) along with job completion certificate (3mks), and Recommendation Letters (2mks) from three clients	10
	Previously undertaken prefabrication And installation of containers	Attach copies of drawings (5mks), photographs (4mks), timelines charts (1mk) of the project and any relevant documentation	20
	(at least 2 projects)	(10 marks per project)	
	Proof of capability to undertake wielding and fabrication works	Attach proof of ownership and active Fabrication of wielding tools	10
Education Qualification	Minimum Diploma in Building Works or Similar works qualification for the Director	Attach Copy of Certificate (s) (3mks) and CV (2mks) for the Director	20
	Minimum Certificate in Civil Works field or Similar qualification for the **Foreman**	Attach Copies of Certificates (5mks) and CV (5mks) for the foreman	
	Resumes of a key staff who will be involved in the project. Must be relevant to the steel works, welding and fabrication process	Attach Copies of Certificates (5mks)	
Work Plan	The bidders should provide a detailed Work Plan not exceeding Six Weeks	Bidders mst submit Gannt chart scheduling all the activities with desired deliverables	10

Bidder (s) are required to attain minimum of 70% score in the technical requirements, failure to which the firm shall not proceed to the next stage of financial evaluation stage.

iv) Financial Evaluation

The bids that qualify at the Technical Capacity evaluation stage will be subjected to financial evaluation to determine the winner. The lowest evaluated bidder will be considered for award of tender.

The score for the Financial Evaluation is 30%.

FORM OF TENDER

TO: _____ *[Name of Employer)* _____*[Date]*

_____ *[Name of Contract]*

Dear Sir,

1. In accordance with the Conditions of Contract, Specifications, Drawings and Bills of Quantities for the execution of the above-named Works, we, the undersigned offer to construct, install and complete such Works and remedy any defects therein for the sum of KShs. _____ *[Amount in figures]*

   Kenya Shillings_____ *[Amount in words]*

2. We undertake, if our tender is accepted, to commence the Works as soon as is reasonably possible after the receipt of the Project Manager's notice to commence, and to complete the whole of the Works comprised in the Contract within the time stated in the Appendix to Conditions of Contract.

3. We agree to abide by this tender until _____ *[Insert date],* and it shall remain binding upon us and may be accepted at any time before that date.

4. Unless and until a formal Agreement is prepared and executed this tender together with your written acceptance thereof, shall constitute a binding Contract between us.

5. We understand that you are not bound to accept the lowest or any tender you may receive.

Dated this _____ day of _____2022

Signature _____in the capacity of_____

Duly authorized to sign tenders for and on behalf of
_____ *[Name of Employer]*

of_____ [*Address of Employer]*

Witness; Name_____

Address_____

Signature_____

Date_____

TENDER QUESTIONNAIRE

Please fill in block letters.

1. Full names of tenderer

   ……

2. Full address of tenderer to which tender correspondence is to be sent (unless an agent has been appointed below)

   ……

3. Telephone number (s) of tenderer

   ……

4. Email address of tenderer

   ……

5. Name of tenderer's representative to be contacted on matters of the tender during the tender period

   ……

_____

Signature of Tenderer

LUTHERAN WORLD FEDERATION

Dadaab Area Program

Bill of Quantities

FOR

INSTALLATION OF CONCRETE SLABS FOR 5,000 LITRES CAPACITY WATER STORAGE TANKS

LOCATION:

Dadaab	**Fafi**
Darusalaam	Alinjugur
Hajj Adam	Walwasi
Taransi	Ruja
Lan Dig	Borehole
Lixiley	Sedah Goe

CONTRACT NO.:

LWF/DDB/CBP/28263/2022

DATE:

April 2022

	Project: **Proposed 5,000 Liters Water Tank Concrete Plinth**				
ITEM	**DESCRIPTION**	**UNIT**	**QTTY**	**RATE (KES)**	**AMOUNT (KES)**
	Element No. o1				
	SUBSTRUCTURES:				
	Site Clearance:				
1	Clear the site of grass, bushes, shrubs and small trees not exceeding 300mm girth including grubbing up roots, burn or cart away arisings	SM	9.00		
	Excavations:				
2	Bulk excavation for pit commencing from ground level and not exceeding 1.50m deep	CM	5.00		
3	Return fill and Ram selected excavated materials around foundations	CM	0.50		
4	Cart away from site surplus excavation spoil away from site	CM	1.50		
	Anti-termite treatment: Approved insecticide treatment; applied in accordance with the manufacturers printed instructions: include for 10 years warranty period				
5	To surfaces of pit	SM	11.00		
6	Surface of Hardcore filling and top of walling	SM	6.00		
	Concrete Works:				
7	75mm thick Mass conc. Class 15/20 (1:3:6) in foundation/pit bed	SM	5.00		
8	125mm thick Tamped Vibrated Reinf. Concrete Class 25/20 (1:1½:3) slab	CM	1.00		
	Hardcore filling:				
9	Approved Hardcore filling placed and compacted in maximum 300mm layers	CM	5.00		
10	50mm thick quary dust or equally approved material as blinding on hardcore to receive concrete	SM	5.00		
11	500g DPM membrane	SM	5.00		
12	8' x 4' Mesh Wire with sufficient overlap in concrete bed	SM	5.00		
	Walling:				
13	300/250mm shaped quarry stone bedded and jointed in cement sand (1:3) mortar with hoop iron in alternate courses	SM	8.00		
	Finishing:				
14	water proofing plaster to wall surfaces using Pudlo or other equal and approved cement additive	SM	12.00		
	Total Element No 1 carried to Summary				

	Project: **Proposed 5,000 Liters Water Tank Concrete Plinth**				
ITEM	**DESCRIPTION**	**UNIT**	**QTTY**	**RATE (KES)**	**AMOUNT (KES)**
	Element No. o2				
8	PLUMBING WORKS: Hoist and place 10,000 Liters PVC Water tank (ROTO - supplied by LWF). Fix all necessary fittings and installation of water pipeline outlet distance not exceeding 12m 1 1/2'' Pvc class D , threading of 1 1/2'' Gi pipe class B outlet . Supply plumbing sundries i.e. (1 1/2'' gate valve Pegler 1pc, Long nipple, back nuts, Hex nipple, elbows, union, sockets, adaptors, tangit, 1 1/2'' Gi tee 1 pc, 1 1/2X 3/4''Gi reducing sockets 2pcs, 3/4'' Pegler taps 2 pcs, tap stand and masonry work for the same .	Item			
	Total Element No 2 carried to Summary				

	Project: **Proposed 5,000 Liters Water Tank Concrete Plinth**				
ITEM	**DESCRIPTION**	**UNIT**	**QTTY**	**RATE (KES)**	**AMOUNT (KES)**
	SUMMARY Grand Total for 1No Water Tank Stand Fabrication and ROTO Tank Installation:				
1	Element No. 1				
2	Element No. 2				
	Grand Total				

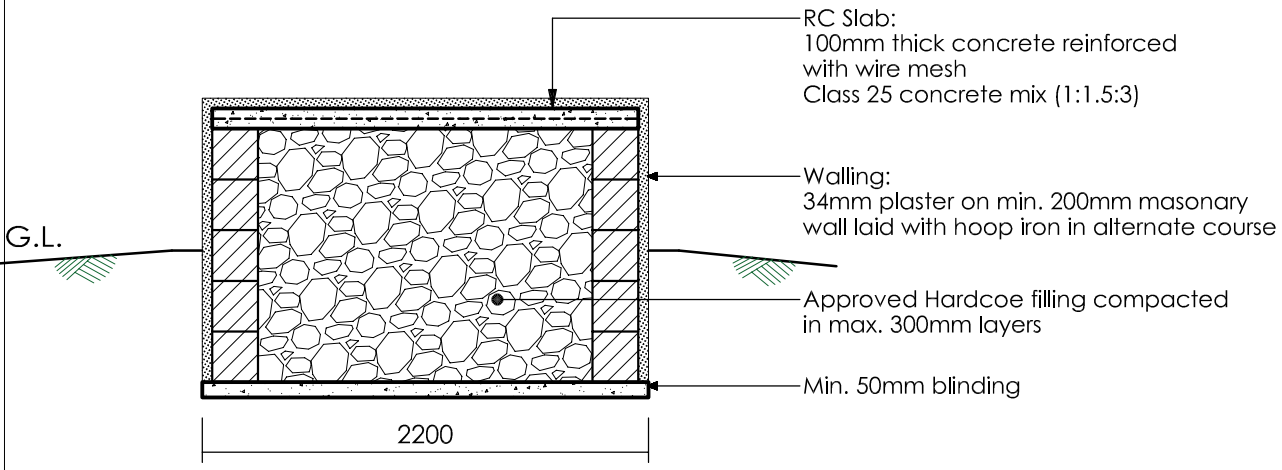

SECTION X -X

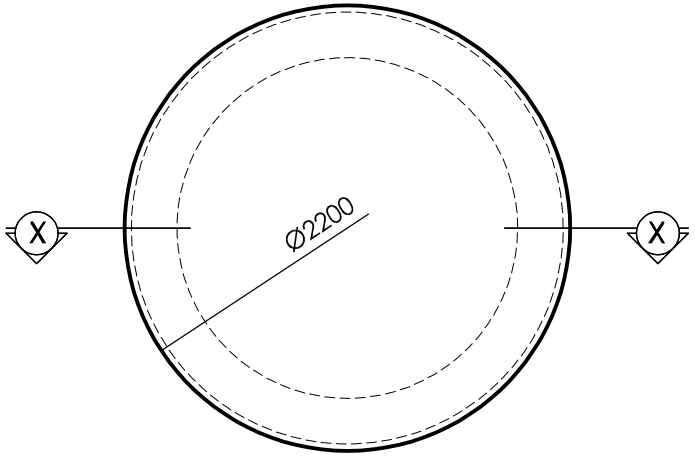

PLAN

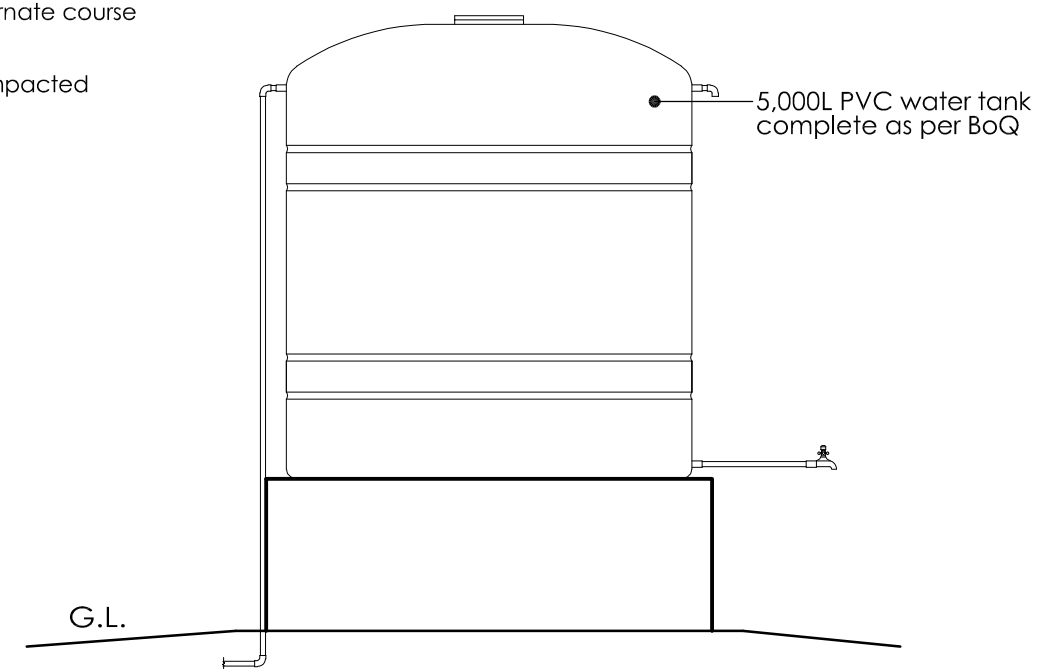

ELEVATION

REVISION	NOTES

project title:

PROPOSED 5,000L CAPACITY CONCRETE PLINTH

dwg title:

PLANS, SECTION & ELEVATION

drawn:	JCO
scale:	NTS
dwg no:	CS/02
date:	April 2022

THE LUTHERAN WORLD FEDERATION

actalliance